Basin Waste
-universal slotted and unslotted

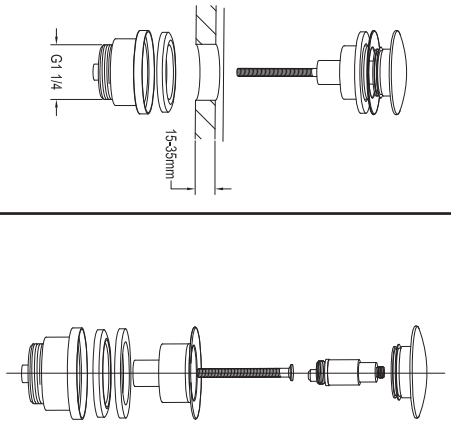

Basin Waste
-universal slotted and unslotted

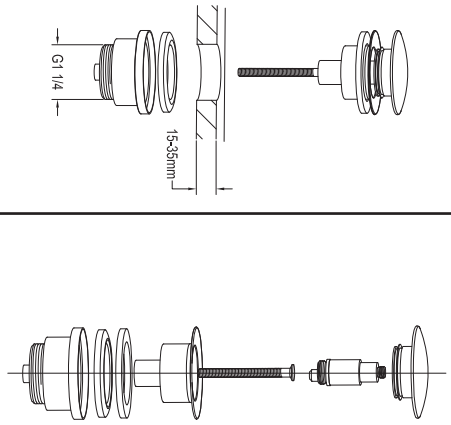

Basin Waste
-universal slotted and unslotted

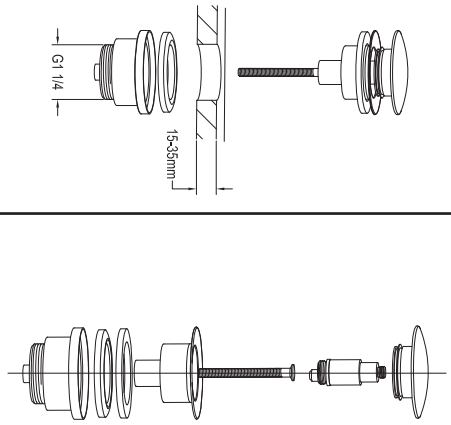

Basin Waste
-universal slotted and unslotted

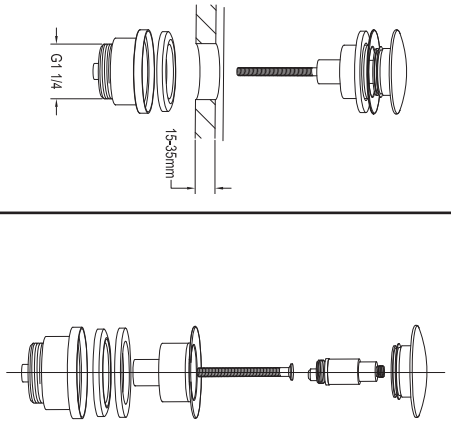

Basin Waste
-universal slotted and unslotted

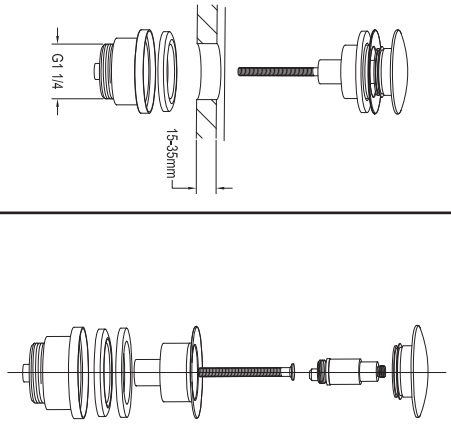

Basin Waste
-universal slotted and unslotted

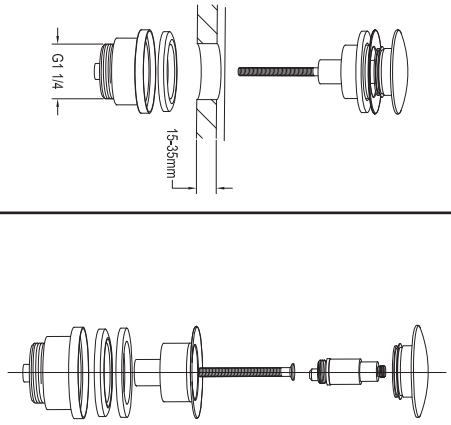

Basin Waste
-universal slotted and unslotted

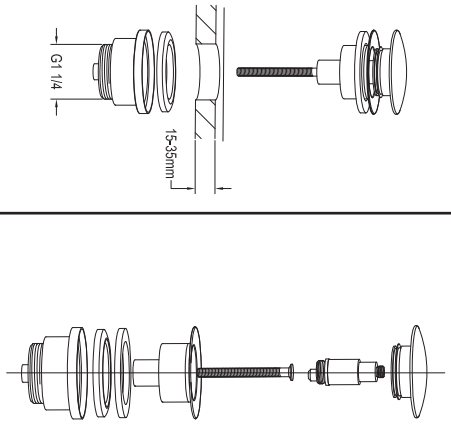

Basin Waste
-universal slotted and unslotted

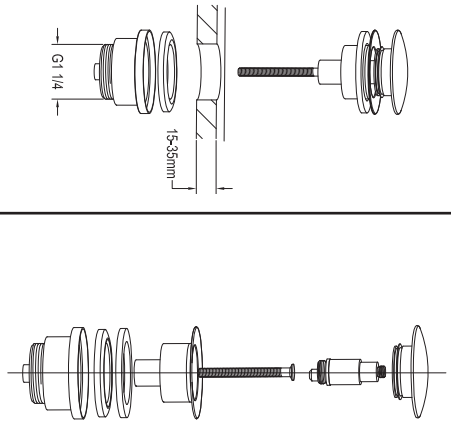
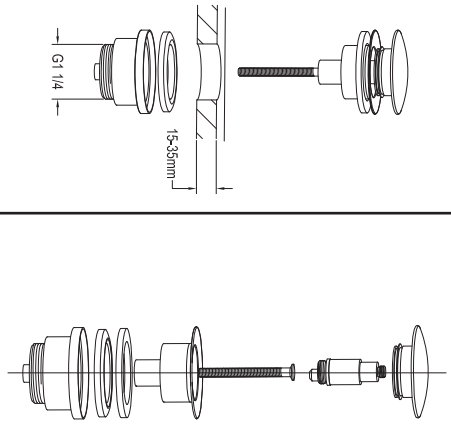
Basin Waste
-universal slotted and unslotted